Partnership. With Guarantee.

3/2-Way coaxial solenoid valve - direct-acting, DN40
Series CVT3/CVF3-40



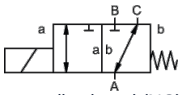

normally closed (NC)

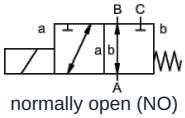

normally open (NO)

Design type	3/2-way coaxial solenoid valve, direct-acting, normally closed or normally open
Mode of operation	pressure-relieved, with spring return, non-overlapping
Nominal size	DN 40mm
Connection	CVT3: G11/2"...G2", CVF3: Flanges PN16, Special flanges and threads on request
Pressure range	0...16 bar, A → B max. 16bar / B → A max. 16bar / A → C max. 16bar / C → A max. 16bar
Back pressure	P2 > P1, see pressure range
Materials	optional Body Nickel-plated steel, Galvanized steel, non-ferrous metal-free or Stainless steel Valve seat Plastic on metal, Sealing materials NBR, PTFE, FPM, CR, EPDM The material specifications of the versions refer exclusively to the valve connection parts in contact with the medium
Media	gaseous - liquid - high-viscosity - gelatinous - contaminated
Flow direction	see pressure range
Mounting type	Installation in rigid piping system, Mounting bracket on request
Mounting position	any
Vacuum Leakage rate	< 10 $^{-6}$ mbar*l*s $^{-1}$
Kv value	18,4m³/h (A → B), 11,5m³/h (A → C)
Switching cycles	90/min.
Switching time	ON 520ms, CLOSED 150ms
Medium temperature	-20...+100°C (Special version -40...+160°C)
Ambient temperature	-20...+80°C
Approvals	on request LR/GL/EN10204
Weight	CVT3 18,5kg, CVF3 23,0kg
Options	Vacuum tests with certificate, Limit switch inductive (Normally closed (NC) PNP- Icomatic/Balluf), Limit switch inductive NAMUR (+ Switching amplifier), Limit switch mechanical (Changeover contact), Version ATEX, cushioned closing

+43 512 52076
austria@stasto.eu
© STASTO Automation KG

Voltage type	AC and DC voltage
Standard voltage	230V/40-60Hz, 24VDC, Permissible voltage fluctuation ±10%
Special voltages	on request
Solenoid system	DC DC solenoid, AC DC solenoid with integrated rectifier (above 100°C with separate rectifier)
Insulation class	H 180°C
Current consumption	N-coil 24VDC 2,07A, 230VAC 0,28A, H-coil 24VDC 3,27A, 230VAC 0,44A
Duty cycle	100% duty cycle (continuous operation)
Degree of protection	IP65 according to EN 60529 with correctly mounted device connector (protection against dust ingress and water jets)
Scope of delivery	incl. connector according to EN175301-803 Form A (formerly DIN43650)-Cable entry M16x1,5
optional	Terminal box M16x1,5 on request
Additional equipment	Illuminated connector with varistor
Ordering information	Nominal size, Connection, Function NC/NO, Operating pressure, Flow rate, Medium, Medium temperature, Ambient temperature, Rated voltage, Rated voltage Limit switch
Application note	The technical design of the valves is media- and application-specific, which may result in deviations from the general specifications stated in the data sheet with regard to version, sealing materials and characteristic values. In the event of inaccurate or incomplete ordering information or application data, there is a risk of incorrect technical sizing of the valves for the intended application purpose. This may result in the physical and/or chemical properties of the materials or seals used being insufficient for the intended application purpose.

Dimensions

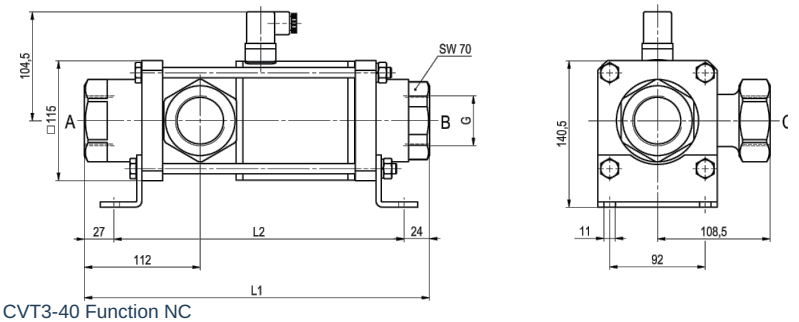

CVT3-40 Function NC

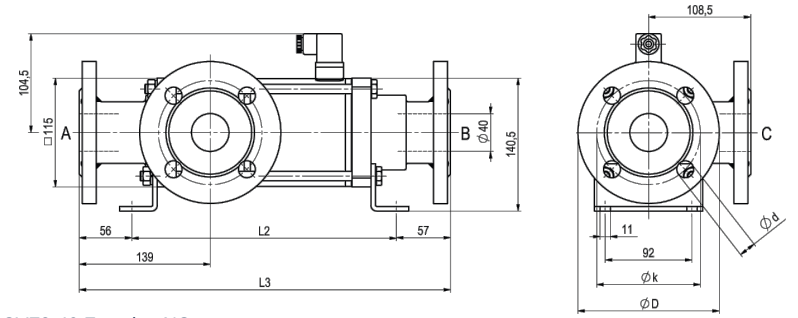

CVF3-40 Function NO

Installation lengths	L1	L2	L3
Standard	332	281	394
with 1/2 inductive limit switches	373	322	435
Manual emergency actuation version (Hd) Hood with 1/2 inductive limit switches	373	322	435
with mechanical limit switches	373	322	435

Flange PN	DIN	ØD	Øk	Ød
16	EN 1092-1	150	110	18

Mounting brackets must be ordered separately

Electrical connections



DIN EN 175301-803

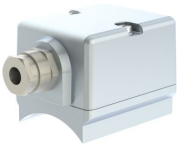

Terminal box



Form A connector
DIN EN 175301-803

Limit switch



Icomatic Plastic version
M12x1, DC 10 - 60V
AC 15 - 250V
-25...+85°C



Balluff Metal version
M12x1, DC 10 - 30V
-25...+70°C

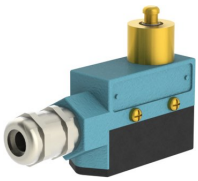

Honeywell
Changeover contact

Illustrations non-binding
Design, dimensional and material changes reserved

+43 512 52076
austria@stasto.eu
© STASTO Automation KG