Partnership. With Guarantee.

2/2-Way coaxial valve - pilot-operated
Series CVTC-8



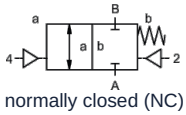

normally closed (NC)

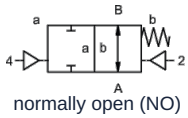

normally open (NO)

Type designation	CVTC-8, with pilot valve CVTC-P-8
Design type	2/2-way coaxial valve, pilot-operated, normally closed or normally open
Mode of operation	pressure-relieved, with spring return
Nominal size	DN 8mm
Connection	G 3/8"
Pressure range	0...40bar
Back pressure	P2 > P1, available (max. 16bar)
Materials	Body Brass Valve seat Plastic on metal, Sealing materials NBR, PTFE, FPM, PE, PU The material specifications of the versions refer exclusively to the valve connection parts in contact with the medium
Media	gaseous - liquid - contaminated - high-viscosity
Flow direction	A → B, according to marking
Mounting type	Installation in rigid piping system, Mounting bracket on request
Mounting position	any
Vacuum Leakage rate	< 10^{-6} mbar*l*s^{-1}
Kv value	1,6m³/h
Switching cycles	400/min.
Switching time	on 70ms, closed 80ms
Medium temperature	with flanged pilot valve up to +60°C (> 60°C on request)
Ambient temperature	with flanged pilot valve up to +50°C (> 50°C on request)
Approvals	on request LR/GL/EN10204
Limit switch	Reed switch, Temperature range max. +70°C
Manual emergency override	via pilot valve
Weight	0,3kg
Options	Vacuum tests with certificate, modular design

+43 512 52076
austria@stasto.eu
© STASTO Automation KG

Voltage type	AC and DC voltage
Standard voltage	230V/40-60Hz, 24VDC, Permissible voltage fluctuation ±10%
Special voltages	on request
Power consumption	DC: 4,8W (2,5W on request), AC: Tightening torque 11,0VA, Holding force 8,5VA
Duty cycle	100% duty cycle (continuous operation)
Degree of protection	IP65 (IP54) according to DIN 40050 with correctly mounted device socket (protection against dust ingress and water jets)
Scope of delivery	incl. connector according to EN175301-803-Form B (formerly DIN43650) - Cable entry M16x1,5
optional	Device connector according to DESINA, connector to vdma, Connector with cable
Additional equipment	Illuminated connector with varistor
Explosion protection	Eex m II T5, Power consumption 24VDC: 3,25W, 230VAC: 2,90W
Ordering information	Nominal size, Connection, Function NC/NO, Operating pressure, Flow rate, Medium, Medium temperature, Ambient temperature, Rated voltage, Rated voltage Limit switch
Application note	The technical design of the valves is media- and application-specific, which may result in deviations from the general specifications stated in the data sheet with regard to version, sealing materials and characteristic values. In the event of inaccurate or incomplete ordering information or application data, there is a risk of incorrect technical sizing of the valves for the intended application purpose. This may result in the physical and/or chemical properties of the materials or seals used being insufficient for the intended application purpose.

Pneumatic actuation

Pilot pressure range	4...10bar (3...10bar on request)
Air consumption	1,2cm³/Stroke
Control	over 3/2-way pilot valve
Connection diagram	co-ax, (CNOMO on request)
Control ports	2/4: G1/8"

Dimensions

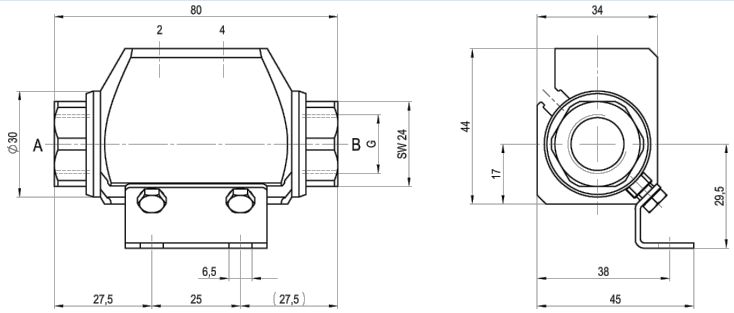

CVTC-8 Function NC

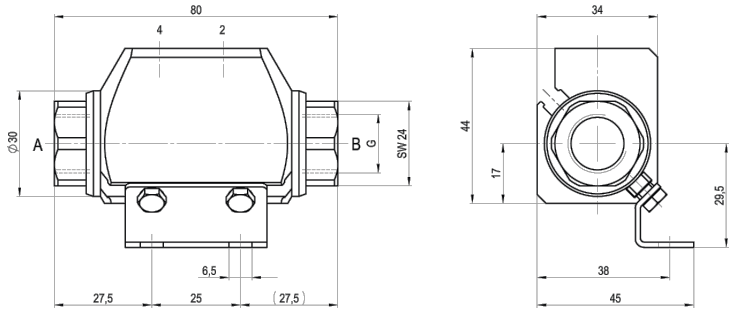

CVTC-8 Function NO

Mounting brackets must be ordered separately

+43 512 52076
austria@stasto.eu

© STASTO Automation KG

Accessories



3/2-Directional pilot valve



electrical connection
Solenoid coil M12x1



electrical connection
Form B connector DIN EN 175301-803



Reed limit switch

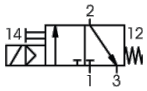

3/2-way pilot valve
Nominal flow rate 60 Nl/min
Pressure range 4-10bar

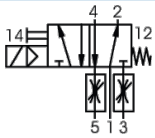

5/2-way pilot valve (only separately)
Nominal flow rate 700Nl/min
Pressure range 4-10bar, G1/8"

Illustrations non-binding
Design, dimensional and material changes reserved

+43 512 52076
austria@stasto.eu
© STASTO Automation KG