Partnership. With Guarantee.

3/2-Way coaxial valve - pilot-operated, DN10
Series CVTE3

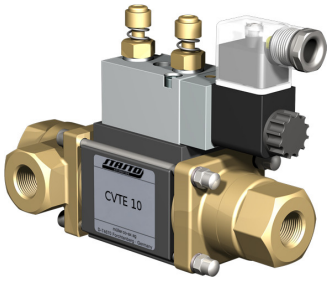

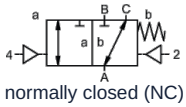

normally closed (NC)

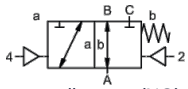

normally open (NO)

Type designation	CVTE3-10, with pilot valve CVTE3-P-10
Design type	3/2-way coaxial valve, pilot-operated, de-energized closed or de-energized open
Mode of operation	pressure-relieved, with spring return, non-overlapping
Nominal size	DN 10mm (DN 9mm 0...100bar)
Connection	G1/4"...G3/4", Special thread on request
Pressure range	0...16, 0...40, 0...63bar or 0...100bar, A → B max. 100bar / B → A max. 16bar / A → C max. 100bar / C → A max. 63bar
Back pressure	P2 > P1, see pressure range
Materials	optional body brass, nickel-plated brass or stainless steel; Aluminium 0...63bar Valve seat Plastic on metal, Sealing materials PTFE, NBR, FPM, CR, EPDM The material specifications of the versions refer exclusively to the valve connection parts in contact with the medium
Media	gaseous - liquid - contaminated - high-viscosity - gelatinous - paste-like
Flow direction	see pressure range
Mounting type	Installation in rigid piping system, Mounting bracket on request
Mounting position	any
Vacuum Leakage rate	< 10^{-6} mbar*l*s^{-1}
Kv value	2,5m³/h (2,1m³/h 0...100bar)
Switching cycles	680/min.
Switching time	ON 30...3000ms, CLOSED 50...3000ms
Cushioning	ON/CLOSED: via throttling of the pilot valve
Medium temperature	with flanged pilot valve up to +60°C (Pilot valve outside the temperature range, medium temperature max. 160°C)
Ambient temperature	with flanged pilot valve up to +50°C
Manual emergency override	via pilot valve
Approvals	on request LR/DNV/EN10204
Weight	1,8kg
Options	Vacuum tests with certificate, Limit switch inductive (Normally closed (NC) PNP- Icomatic/Balluf), Limit switch inductive NAMUR (+ Switching amplifier), Version ATEX Ex II 2G Ex h IIC T6...T3 Gb / Ex II 2D Ex h IIIC T-40°C...+195°C Db

+43 512 52076
austria@stasto.eu
© STASTO Automation KG

Voltage type	AC and DC voltage
Standard voltage	230V/50Hz, 24VDC, Permissible voltage fluctuation ±10%
Special voltages	on request
Power consumption	DC: 4,8W (2,5W on request), AC: Tightening torque 11,0VA, Holding force 8,5VA
Duty cycle	100% (Continuous operation)
Degree of protection	IP65 according to EN 60529 with correctly mounted device connector (Protection against dust ingress and water jets)
Scope of delivery	incl. connector according to EN175301-803-Form B or rather Industrial design form - Cable entry M16x1,5
optional	Solenoid coil M12-DESINA, Solenoid coil M12-VDMA
Additional equipment	Illuminated connector with varistor
Explosion protection optional	ATEX Ex II 2G Ex mb IIC T5 Gb, Ex II 2D Ex mb tb IIIC T95°C IP66 Db Power consumption 24VDC: 3,25W, 230VAC: 2,90W

Pneumatic actuation

Pilot pressure range	4...8bar
Air consumption	2cm³/Stroke
Switching speed	Main valve continuously adjustable via the pilot valve throttles
Control	preferably via 5/2-way pilot valve
Connection diagram	co-ax, (NAMUR on request)
Control ports	2/4: G1/8"

Hydraulic actuation

Pilot pressure range	4...10bar
Control	preferably via 4/2-way pilot valve
Control ports	X/Y: G1/8"
Ordering information	Nominal size, Connection, Function NC/NO, Operating pressure, Flow rate, Medium, Medium temperature, Ambient temperature, Rated voltage, Rated voltage Limit switch, Actuation, Pressure port A, B or C
Application note	The technical design of the valves is media- and application-specific, which may result in deviations from the general specifications stated in the data sheet with regard to version, sealing materials and characteristic values. In the event of inaccurate or incomplete ordering information or application data, there is a risk of incorrect technical sizing of the valves for the intended application purpose. This may result in the physical and/or chemical properties of the materials or seals used being insufficient for the intended application purpose.

Dimensions Function NC

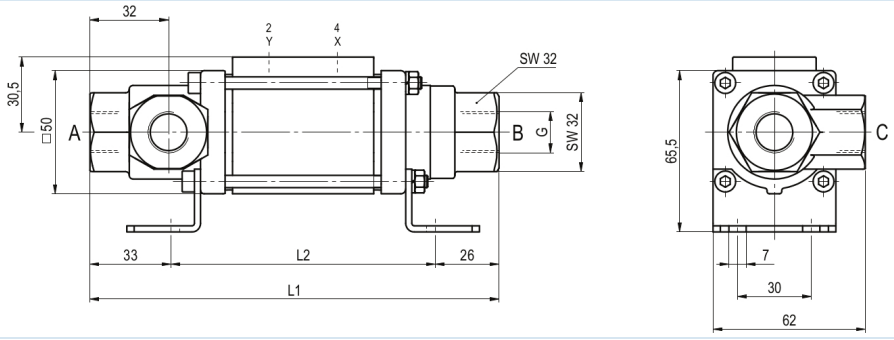

Dimensions Function NO

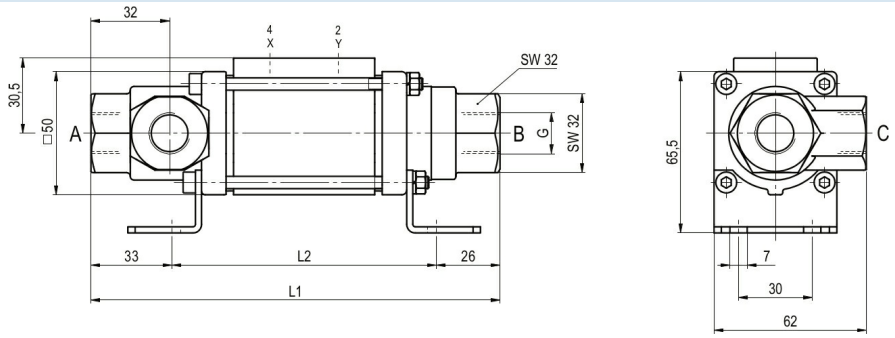

Dimensions Function NC (>63bar)

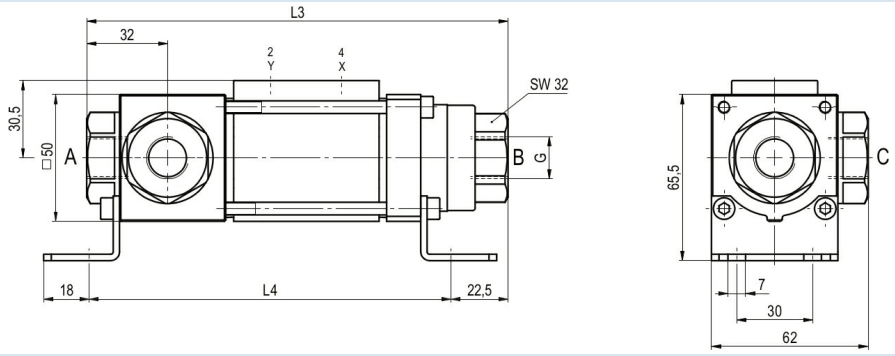

Dimensions Function NO (>63bar)

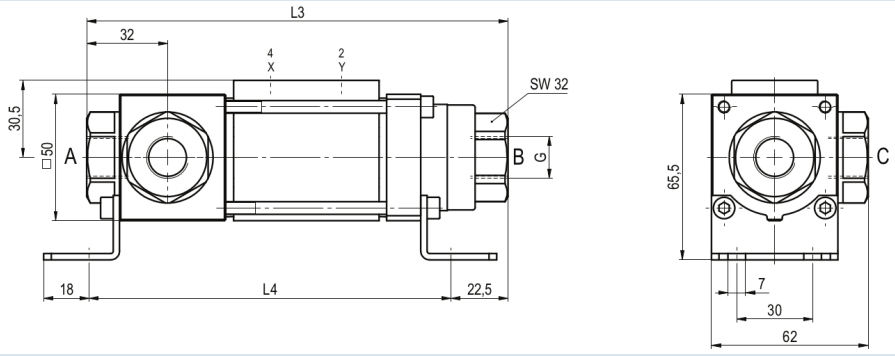

Installation lengths	L1	L2	L3	L4
Standard	166,5	107,5	166,5	143
with 1/2 inductive limit switches	186,5	127,5	186,5	163

Mounting brackets must be ordered separately

Pilot valves and electrical connections



Pilot valve ABS57
5/2-way valve
electropneumatic
G1/4, with exhaust air flow controls
p = 4...10bar

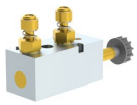

Pilot valve VK 10
5/2-way valve
electropneumatic
G1/8, with exhaust air flow controls
p = 4...10bar



electrical connection
Solenoid coil M12x1



electrical connection
Form B connector
DIN EN 175301-803
or rather Industrial design form

+43 512 52076
austria@stasto.eu

© STASTO Automation KG

Limit switch



Icomatic Plastic version
M12x1, DC 10...60V
AC 15...250V
-25...+85°C



Balluff Metal version
M12x1, DC 10...30V
-25...+70°C

Illustrations non-binding
Design, dimensional and material changes reserved

+43 512 52076
austria@stasto.eu
© STASTO Automation KG