Partnership. With Guarantee.

3/2-Way coaxial valve - pilot-operated, DN15
Series CVTE3/CVFE3

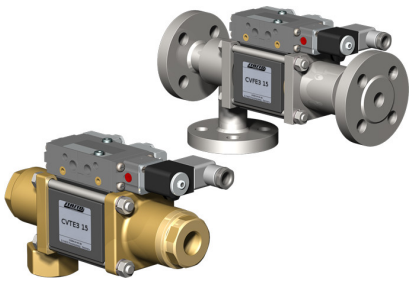

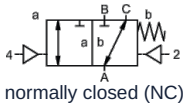

normally closed (NC)

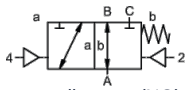

normally open (NO)

Type designation	CVTE3-15, CVFE3-15, with pilot valve CVTE3-P-15, CVFE3-P-15
Design type	3/2-way coaxial valve, pilot-operated, de-energized closed or de-energized open
Mode of operation	pressure-relieved, with spring return, non-overlapping
Nominal size	DN 15mm
Connection	CVTE3: G3/8"...G3/4", CVFE3: Flanges PN16/40/100, Special flanges and threads on request
Pressure range	0...16, 0...40, 0...63 or 0...100bar, A → B max. 100bar / B → A max. 16bar / A → C max. 100bar / C → A max. 100bar
Back pressure	P2 > P1, see pressure range
Materials	optionally body brass, nickel-plated brass, nickel-plated steel, zinc-plated steel, non-ferrous metal-free or stainless steel Valve seat Plastic on metal, Sealing materials PTFE, NBR, FPM, CR, EPDM The material specifications of the versions refer exclusively to the valve connection parts in contact with the medium
Media	gaseous - liquid - contaminated - high-viscosity - gelatinous - paste-like
Flow direction	see pressure range
Mounting type	Installation in rigid piping system, Mounting bracket on request
Mounting position	any
Vacuum Leakage rate	< 10^{-6} mbar*l*s^{-1}
Kv value	5,6m³/h
Switching cycles	200/min.
Switching time	ON 50...3000ms, CLOSED 50...3000ms
Cushioning	ON/CLOSED: via throttling of the pilot valve
Medium temperature	with flanged pilot valve up to +60°C (Pilot valve outside the temperature range, medium temperature max. 160°C)
Ambient temperature	with flanged pilot valve up to +50°C
Manual emergency override	via pilot valve
Approvals	on request LR/DNV/EN10204
Weight	CVTE3 4,5kg, CVFE3 5,3kg
Options	Vacuum tests with certificate, Limit switch inductive (Normally closed (NC) PNP- Icomatic/Balluf), Limit switch inductive NAMUR (+ Switching amplifier), Limit switch mechanical (Changeover contact), Flushing ports, Leakage ports, Version ATEX Ex II 2G Ex h IIC T6...T3 Gb / Ex II 2D Ex h IIIC T-40°C...+195°C Db

+43 512 52076
austria@stasto.eu
© STASTO Automation KG

Voltage type	AC and DC voltage
Standard voltage	230V/50Hz, 24VDC, Permissible voltage fluctuation ±10%
Special voltages	on request
Power consumption	DC: 4,8W (2,5W on request), AC: Tightening torque 11,0VA, Holding force 8,5VA
Duty cycle	100% (Continuous operation)
Degree of protection	IP65 according to EN 60529 with correctly mounted device connector (protection against dust ingress and water jets)
Scope of delivery	incl. connector according to EN175301-803-Form B or rather Industrial design form - Cable entry M16x1,5
optional	Solenoid coil M12-DESINA, Solenoid coil M12-VDMA
Additional equipment	Illuminated connector with varistor
Explosion protection optional	ATEX Ex II 2G Ex mb IIC T5 Gb, Ex II 2D Ex mb tb IIIC T95°C IP66 Db Power consumption 24VDC: 3,25W, 230VAC: 2,90W

Pneumatic actuation

Pilot pressure range	4...8bar
Air consumption	11,0cm³/Stroke
Switching speed	Main valve continuously adjustable via the pilot valve throttles
Control	preferably via 5/2-way pilot valve
Connection diagram	co-ax/NAMUR, (ISO 1 on request)
Control ports	2/4: G1/8" (G1/4" on request)

Hydraulic actuation

Pilot pressure range	15...30bar/30...60bar
Control	preferably via 4/2-way pilot valve
Control ports	X/Y: G1/4" (NPT 1/4 on request)

Ordering information	Nominal size, Connection, Function NC/NO, Operating pressure, Flow rate, Medium, Medium temperature, Ambient temperature, Rated voltage, Rated voltage Limit switch, Actuation, Pressure port A, B or C
Application note	The technical design of the valves is media- and application-specific, which may result in deviations from the general specifications stated in the data sheet with regard to version, sealing materials and characteristic values. In the event of inaccurate or incomplete ordering information or application data, there is a risk of incorrect technical sizing of the valves for the intended application purpose. This may result in the physical and/or chemical properties of the materials or seals used being insufficient for the intended application purpose.

© STASTO Automation KG

Dimensions CVTE3-15 Function NC

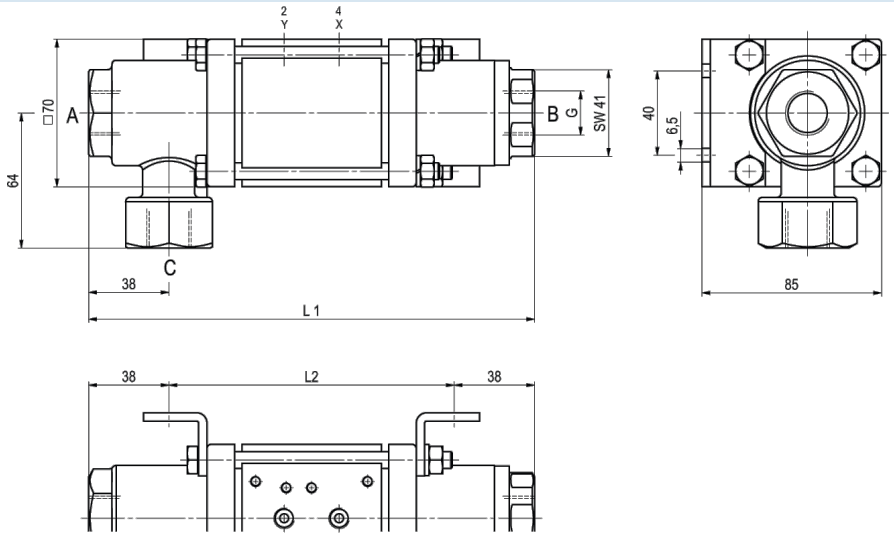

Mounting brackets must be ordered separately

Dimensions CVFE3-15 Function NO

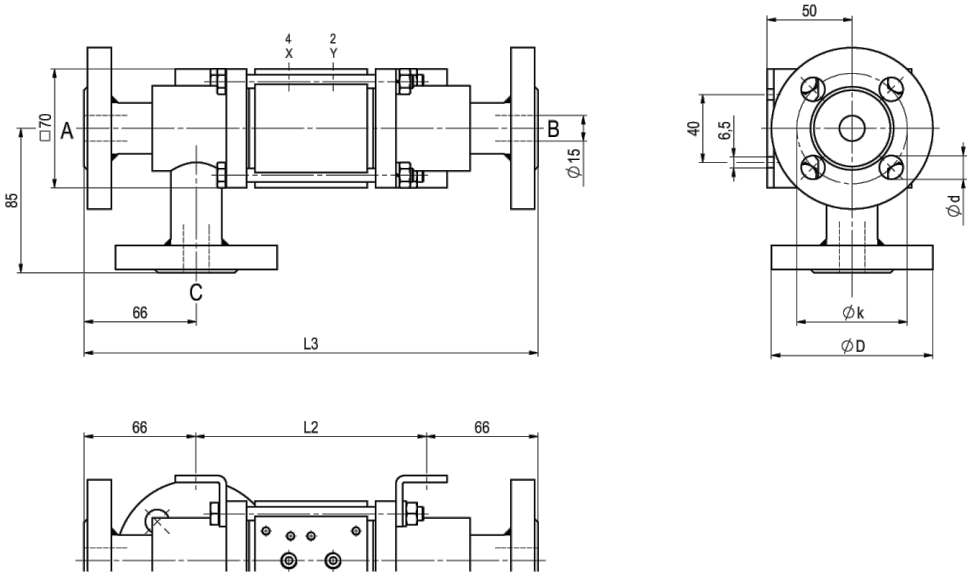

Mounting brackets must be ordered separately

Installation lengths	L1	L2	L3
Standard	211	135	267
with 1/2 inductive limit switches	237	161	293
with pressure lubricator head	244	168	300
with mechanical limit switches	237	161	293

Flange PN	DIN	ØD	Øk	Ød
16	EN 1092-1	95	65	14
40	EN 1092-1	95	65	14
100	EN 1092-1	105	75	14

+43 512 52076
austria@stasto.eu

© STASTO Automation KG

Pilot valves



Pilot valve ABS56
5/2-way valve NAMUR
electropneumatic
G1/4, with exhaust air
flow controls
p = 4...10bar

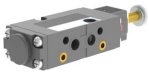

Pilot valve
5/2-way valve NAMUR
electropneumatic
G1/8, with exhaust air flow controls
p = 4...10bar



Pilot valve
5/2-way valve ISO1
electropneumatic
G1/4
p = 4...10bar



Pilot valve
5/2-way valve co-ax
electropneumatic
G1/4
p = 4...10bar

Electrical connections



electrical connection
Solenoid coil M12x1



electrical connection
Form B connector DIN EN 175301-803
or rather Industrial design form

Limit switch



Icomatic Plastic version
M12x1, DC 10 - 60V
AC 15...250V
-25...+85°C



Balluff Metal version
M12x1, DC 10...30V
-25...+70°C



Honeywell
Changeover contact

Illustrations non-binding
Design, dimensional and material changes reserved

+43 512 52076
austria@stasto.eu
© STASTO Automation KG