Partnership. With Guarantee.

Steel flanged ball valves with pneumatic rotary actuator
Series BA044



Design type	Actuator: piston actuator with 2 opposed pistons, elastic sealing, actuator in all details in accordance with ISO 5211 or according to NAMUR recommendations, End positions adjustable on both sides +/-5°
Connection	Flanges DN15...DN200 according to EN1092
Overall length	according to EN558-1R27
Materials Standard version	Actuator: Hard anodized aluminium, Pinion, nickel-plated steel, Piston guide POM, Seals NBR Ball valve: Housing steel, zinc-plated, Ball stainless steel AISI 304, Ball seal made of PTFE, Spindle seal PTFE/Graphoil/FKM, Compensation hole
Function	available in double-acting or single-acting Version
Mounting type	Installation in rigid piping system
Mounting position	any
Control medium	filtered and lubricated or non-lubricated compressed air
Application range	Fluids and gases of group 1 and 2 in accordance with PED 2014/68/EU that do not attack the materials used
Medium temperature	-10...+160°C (Steam max. 180°C)
Ambient temperature	-10...+85°C
Control pressure	5,5...8bar, Adaptation to lower pilot pressures possible on request
Operating pressure	Vacuum max. 10^{-3} Torr up to Nominal pressure according to table and pressure-temperature diagram (Steam max. 10bar)
Approvals	Fire-safe, TA-Luft test
Special version	Stainless steel pinion, Ambient temperatures -10...+150°C, ATEX
Accessories	assembled manual, pneumatic or electric control valve electrical end position feedback, Positioner in I/P or P/P version Adjustment of the switching speed
Ordering note	When ordering, please also specify pilot pressure, operating medium, operating pressure and operating temperature.
Application note	The pressure and temperature specifications are maximum values for normal conditions, for lubricating or non-degreasing media. Degreasing media in particular reduce the specified values and increase the required torque. For these special cases, we recommend prior consultation. When selecting the valve, the lowest control pressure occurring in the system must be taken as the basis.

+43 512 52076
austria@stasto.eu
© STASTO Automation KG

Dimensions

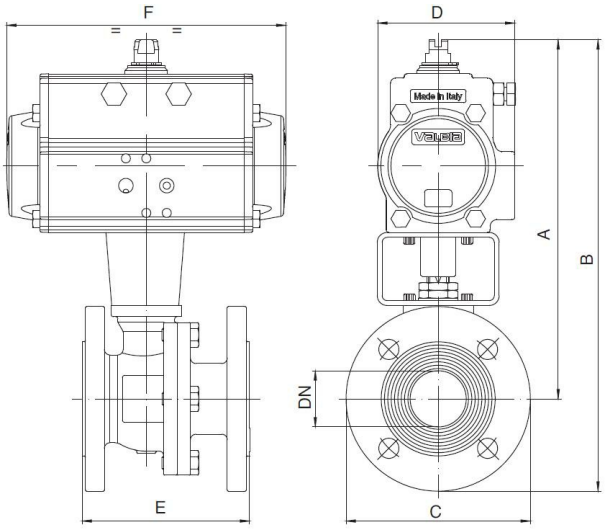

Ball valves with double-acting rotary actuator

DN [mm]	max. operating pressure [bar] up to 85°C	A	B	C	D	E	F	Actuator type	Kv value [m³/h]	Weight [approx. kg]	Type
15	40	148	195	95	45	115	110	PAD032	16,3	3,1	BA044-15-D0
15	40	184,5	231,5	95	71	115	141	PAD052	16,3	3,9	BA044-15-D0-B*
20	40	189	242	105	71	120	141	PAD052	29,5	4,7	BA044-20-D0
25	40	207	265	115	71	125	141	PAD052	43	5,8	BA044-25-D0
32	40	210	280	140	71	130	141	PAD052	89	7,4	BA044-32-D0
40	40	250	325	150	81	140	164	PAD063	230	10,2	BA044-40-D0
50	40	275	357	165	95	150	210	PAD075	265	14,9	BA044-50-D0
65	16	299	392	185	106	170	241	PAD085	540	20,9	BA044-65-D0
80	16	333	433	200	106	180	241	PAD085	873	26,3	BA044-80-D0
100	16	360	470	220	123	190	275	PAD100	1390	34,3	BA044-100-D0
125	16	417	542	250	137	325	333	PAD115	1707	55,7	BA044-125-D0
150	16	462	605	285	148	350	372	PAD125	2024	96,2	BA044-150-D0
200	16	551	721	340	186	400	500	PAD160	2720	130,5	BA044-200-D0

*With the suffix B, the ball valves are equipped with the PAD052 actuator. When using limit switch boxes and NAMUR control valves, B types must be used.

Ball valves with single-acting rotary actuator

DN [mm]	max. operating pressure [bar] up to 85°C	A	B	C	D	E	F	Actuator type	Kv value [m³/h]	Weight [approx. kg]	Type
15	40	184	232	95	71	115	141	PAS0525	16,3	4,1	BA044-15-S0
20	40	200	253	105	81	120	164	PAS0635	29,5	5,6	BA044-20-S0
25	40	219	277	115	81	125	164	PAS0635	43	6,7	BA044-25-S0
32	40	222	292	140	81	130	164	PAS0635	89	8,3	BA044-32-S0
40	40	282	357	150	106	140	241	PAS0855	230	13,3	BA044-40-S0
50	40	302	385	165	123	150	275	PAS1005	265	19,2	BA044-50-S0
65	16	346	439	185	137	170	333	PAS1155	540	28,4	BA044-65-S0
80	16	393	493	200	148	180	372	PAS1255	873	36,5	BA044-80-S0
100	16	407	517	220	148	190	372	PAS1255	1390	42,9	BA044-100-S0
125	16	476	601	250	186	325	500	PAS1605	1707	80,1	BA044-125-S0
150	16	565	708	285	217	350	579	PAS2005	2024	135,3	BA044-150-S0
200	16	609	779	340	217	400	579	PAS2005	2720	161,8	BA044-200-S0

Single-acting actuators are supplied spring-closing (NC) unless otherwise ordered.

© STASTO Automation KG

Pressure-temperature diagram

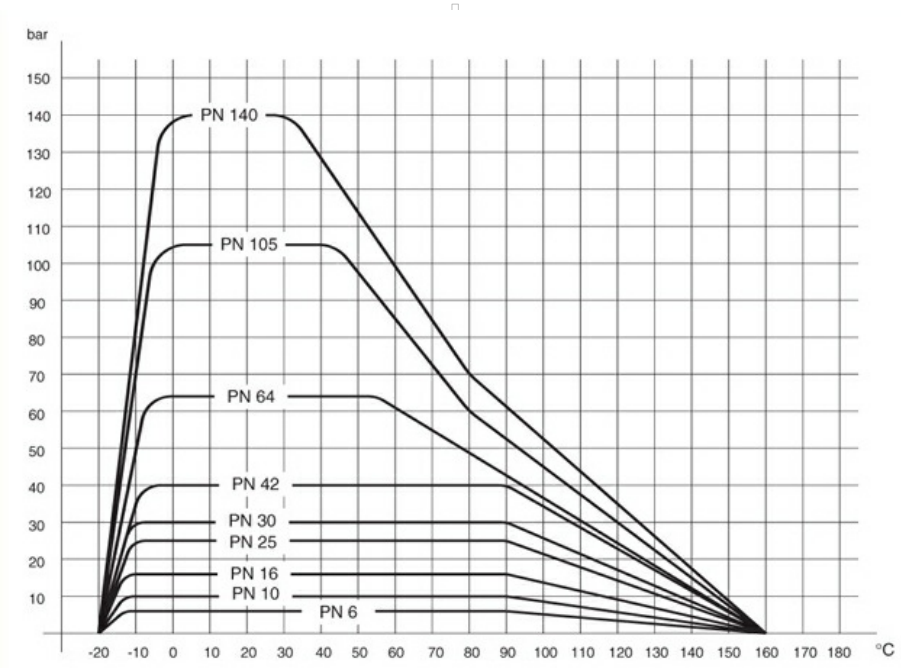

Illustrations non-binding
Design, dimensional and material changes reserved