Partnership. With Guarantee.

Gate valve with double-acting pneumatic actuator Series A1N2





Design type	Sandwich gate valve, single-acting sealing, rising stem, Manually adjustable packing
Actuation	pneumatic double-acting
Connection	Flanges DN50...DN500 according to EN1092-2 PN10
Materials	see material table
Medium temperature	Housing Grey cast iron EN-GJL-250 or rather Ductile iron EN-GJS-500-7 -10...120°C, Housing Stainless steel 1.4408 -30...120°C, additionally also dependent on the packing and sealing material - see table, higher temperatures on request
Ambient temperature	-10...80°C
Operating pressure	up to nominal pressure according to table ATTENTION: Spool can be pressurized against the flow direction with 30% of the maximum operating pressure. This may result in slight leakage in the closed position.
Control medium	filtered, lubricated and water-free compressed air Solid particle class 2, Water content class 4 and Oil content class 3 after ISO 8573-1
Pilot pressure range	5,5...8bar, lower pilot pressures on request
Flow direction	Marked by an arrow. For dry media we recommend a flow opposite to the arrow direction. ATTENTION: Spool can be pressurized against the flow direction with 30% of the maximum operating pressure. This may result in slight leakage in the closed position.
Mounting type	Installation in rigid piping system
Mounting position	vertically upwards, other mounting position on request
Accessories	assembled 5/2-way directional control valve, mounted mechanical limit switches or rather inductive proximity switches
ATEX	suitable for use in potentially explosive atmospheres Zone 2 and 22 (ATEX Zone 1 and 21 on request)
Special versions	Nominal sizes up to 1200mm, single-acting pneumatic actuator, Stainless steel pneumatic cylinder, Electric actuator, with manual emergency override, Sliding discs slide plate PTFE, Flushing bores, other nominal pressures on request

+43 512 52076
austria@stasto.eu
© STASTO Automation KG

Material table:

Type	A1N2H2-5-...-B	A1N2I2-5-...
Housing	Grey cast iron EN-GJL-250 or rather Ductile iron EN-GJS-500-7 epoxy coated RAL5015, Coating 80µm	Stainless steel 1.4408
Slide plate	Stainless steel AISI 304	Stainless steel 1.4401
Connection plates/Protective plates	Steel coated	Steel coated
Pack (standard)	PTFE-synthetic/EPDM	PTFE-synthetic/EPDM
Seat seal (standard)	EPDM	EPDM
Sliding discs slide plate	RCH-1000(Polyethylene)	RCH-1000(Polyethylene)
Piston rod	Stainless steel AISI 304	Stainless steel AISI 304
Cylinder tube	Aluminium	Aluminium
Cylinder head and end cap	Cylinder bore diameter 80...200 Aluminium, above Ductile cast iron	Cylinder bore diameter 80...200 Aluminium, above Ductile cast iron
Tie rods	Galvanized steel	Galvanized steel

Seat variants single-sided sealing:

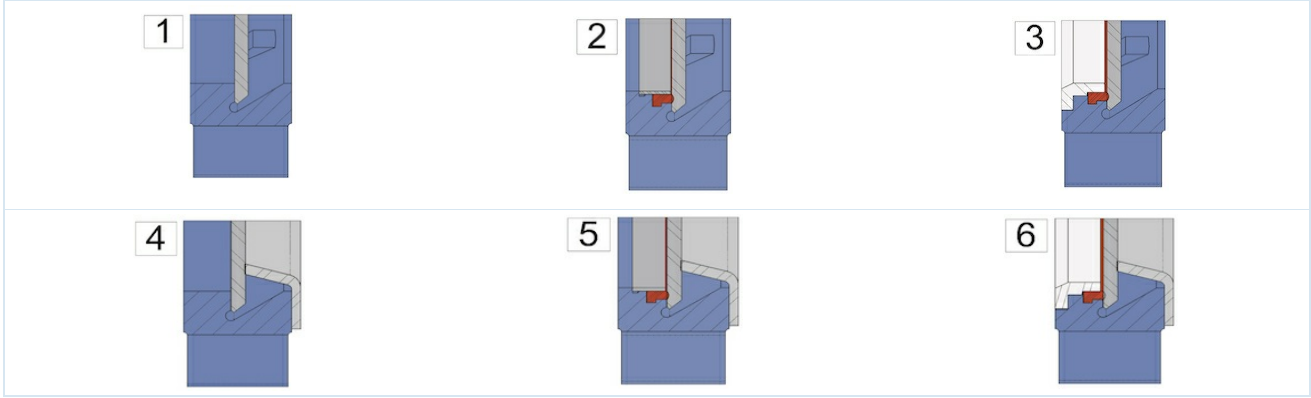

1 ...metal-to-metal sealing	2 ...soft-sealing with fixing ring (Standard)	3 ...soft-sealing with reinforced retaining ring or rather Wiper for slide plate
4 ...metal-seated with abrasion protection	5 ...soft-sealing with retaining ring and abrasion protection	6 ...soft-sealing with reinforced retaining ring or rather Wiper for slide plate and abrasion protection

Possible packages:

Package	Medium temperature [°C]	Application examples
PTFE-synthetic/EPDM	-15 ...+90	neutral fluids, Liquids with 5% solid content, Granules, Slurries
PTFE-synthetic/FKM	-15 ...+180	Liquids, Liquids with 5% solid content, Granules, Slurries
PTFE	-30 ...+200	for almost all liquids

Possible seat seals:

Seal	Medium temperature [°C]	Leakage [in % of the flow rate]	Application examples
EPDM	-5...+90	0	neutral fluids, Liquids with 5% solid content, Granules, Slurries
metallic	-20...+650	1,5	dry media and liquids with 5% solid content, Granules, Slurries
PTFE	-20 ...+180	0,5	Alkalis and acids
FKM	0...+180	0	Acids, Fuels and oil-containing liquids
NBR	-20...+90	0	Oils and oil-containing fluids
Silicone	-25...+200	0	Food and pharmaceutical products

Dimensions:

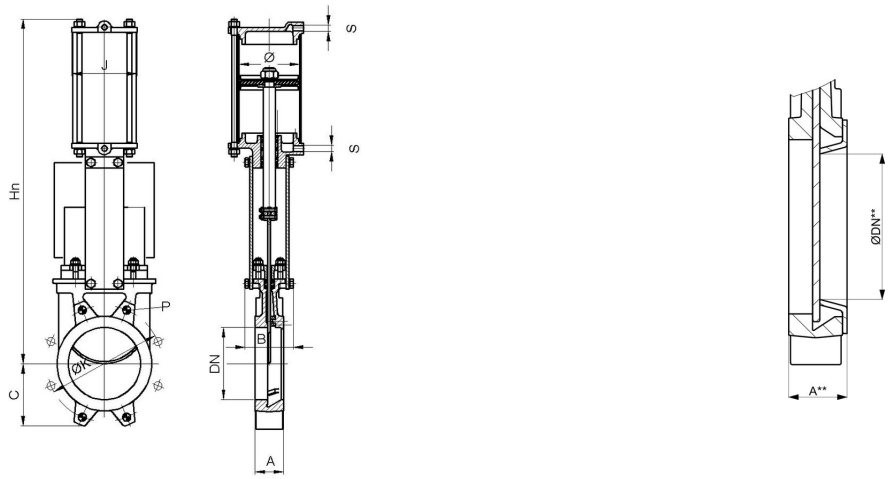

incl. Abrasion protection

Nominal size DN[mm]	ØDN**	max. operating pressure [bar]	A	A**	B	C	Hn	ØK	Depth* P	J	Ø Cylinder	S	Kv value [m 3 /h]	Kv value [m 3 /h]***	Weight [kg]
50	25	10	40	46	92	63	400	125	8	96	80	G1/4"	206	28	7
65	39	10	40	46	92	70	442	145	8	96	80	G1/4"	305	72	8
80	52	10	50	56	92	92	484	160	9	96	80	G1/4"	485	137	9
100	72	10	50	56	92	105	546	180	9	115	100	G1/4"	895	279	12
125	97	10	50	56	102	120	630	210	9	138	125	G1/4"	1550	548	18
150	119	8	60	66	102	130	692	240	10	138	125	G1/4"	2095	851	22
200	167	8	60	66	119	160	869	295	10	175	160	G1/4"	3834	1888	37
250	217	8	70	77	119	198	1032	350	12	218	200	G3/8"	5375	3400	58
300	259	6	70	77	119	234	1181	400	12	218	200	G3/8"	8083	4845	72
350	302	6	96	105	194	256	1379	460	21	270	250	G3/8"	10700	6808	130
400	352	6	100	109	194	292	1535	515	21	270	250	G3/8"	14200	9746	155
450	400	5	106	115	290	308	1677	565	22	382	300	G1/2"	18405	12442	225
500	449	4	110	119	290	340	1839	620	22	382	300	G1/2"	23215	15979	257

*Thread depth, DN600...DN1200 on request
***Kv value incl. Abrasion protection

Limit switch

Type	MSU01A	MSU05	MSU03	MSU04
				
Manufacturer/type	Siemens 3SE5122	IFM IG0011	IFM IGS208	IFM NG501A
Description	N/O / N/C	M18, 20-250VAC/DC, NO, 2-wire, Cable 2m	M18, 10-30VDC, NO, 2-wire or 3-wire, Cable 2m	M18, ATEX EEx i, Cable 2m
Ambient temperature	-25...+85°C	-25...+80°C	-25...+70°C	-20...+70°C
Degree of protection	IP66	IP67	IP67	IP67
maximum switching capacity	230VAC/6A 24VDC/0,27A	AC 250mA, DC 100mA	DC 100mA	-

Flange information:

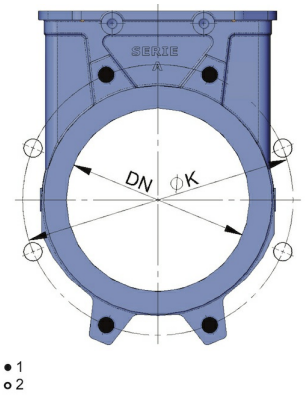

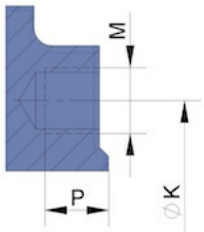

1...Blind tapped hole thread, 2...Through bore

Nominal size DN[mm]	Number of blind tapped holes	Number of through holes	ØK	M	Depth Blind tapped hole thread P
50	4	-	125	M16	8
65	4	-	145	M16	8
80	4	4	160	M16	9
100	4	4	180	M16	9
125	4	4	210	M16	9
150	4	4	240	M20	10
200	4	4	295	M20	10
250	6	6	350	M20	12
300	6	6	400	M20	12
350	10	6	460	M20	21
400	10	6	515	M24	21
450	14	6	565	M24	22
500	14	6	620	M24	22
DN600 ...DN1200 on request					

Illustrations non-binding
Design, dimensional and material changes reserved

+43 512 52076
austria@stasto.eu
© STASTO Automation KG